ADJUSTABLE REFERENCE RACK SYSTEM

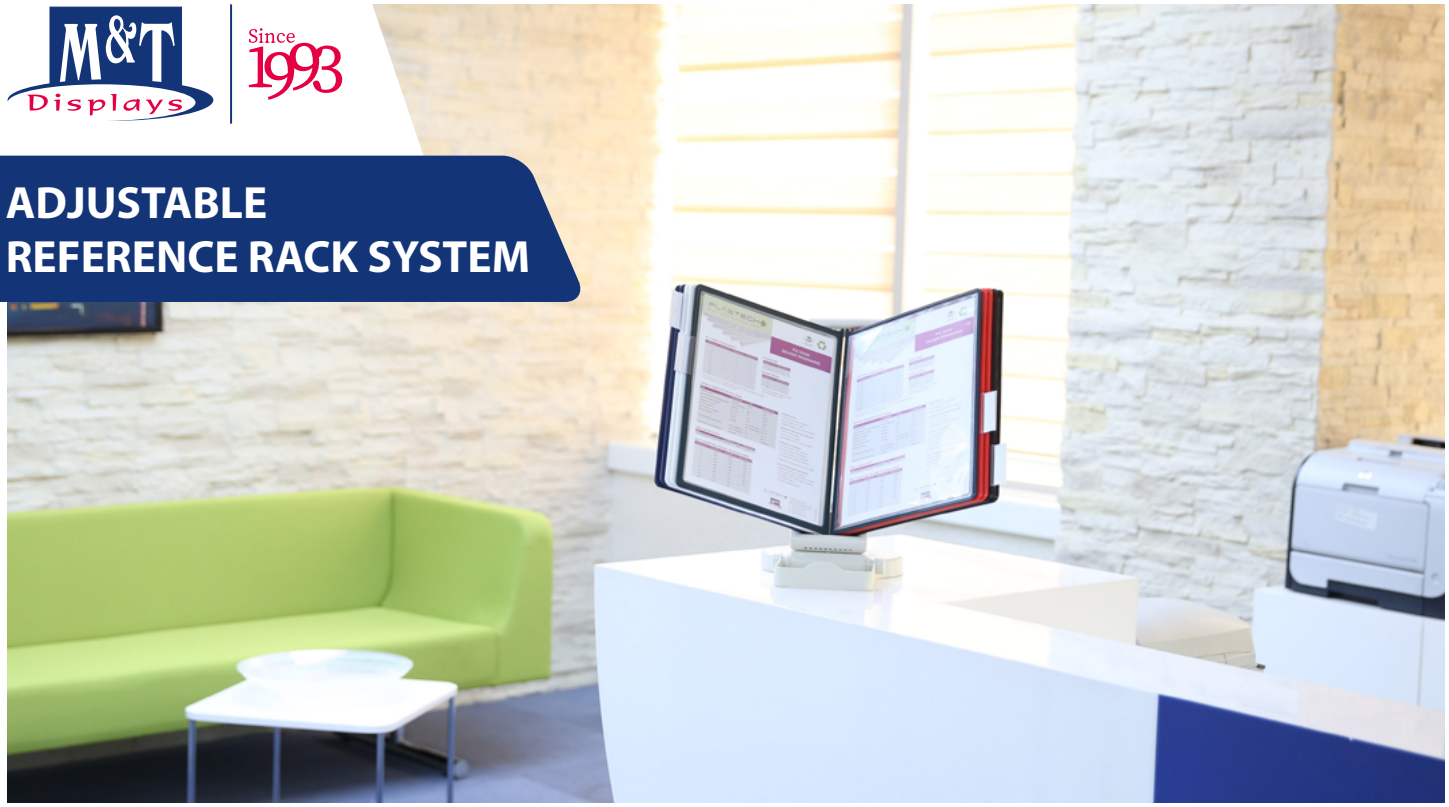

DISPLAYING YOUR MESSAGES WITH EYE LEVEL ANGLE ADJUSTMENT

Heavy base Adjustable Rack System with capacity of 10 display pockets. Table Top Reference allows you to organize busy environments by allowing to adjusting the angle to comfortable eye level. 10 x pockets are included in the system. Pockets are double sided, allowing you to display 20 pages at a time.

KEY SELECTION ATTRIBUTES

* Adjustable table top reference rack with a heavy plastic base.
• Capacity of 10 PET pockets in one rack.
* Double sided pockets allow to display 20 different pages.
* 10 mix colour pockets included in the system.
• Pocket frames in three color options as red, black and grey.
• Please don't forget to order tab insets seperately.





T: +90 850 433 67 85 / info@mtdisplays.com / www.mtdisplays.com

SUITABLE FOR

Reference Racks can be used for INDOOR applications, for signage needs in many locations like shopping centers, markets, groceries, hotels, offices airports, shops and stores, hospitals, schools, apartments and many more.

WATCH VIDEO

Watch video at our website
www.mtdisplays.com

FEATURES





EXPLODED VIEW



TECHNICAL DRAWING

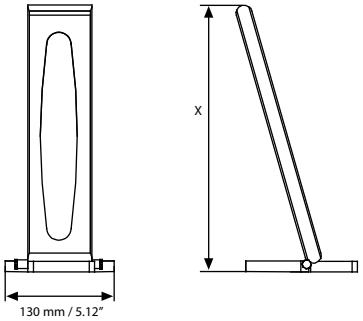

ARTICLES

				WEIGHT	PACKING SIZE
ARTICLE	PAPER SIZE	X	DESCRIPTION	WITH PACKING	*W X H X D
TAB5899002	210 X 297 mm	405 mm	White	2,750 kg	105 X 390 X 265 mm

OPTIONAL ACCESSORIES

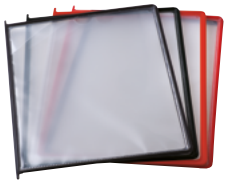

Red Black

Please don't forget to order. 10 pcs of 1 colour in a box.

POSTER POCKET			WEIGHT	PACKING SIZE(10 Pcs)
ARTICLE	PAPER SIZE	DESCRIPTION	WITH PACKING	*W X H X D
TAB0590304	210 X 297 mm	Red	0,550 kg	390 X 550 X 590 mm
TAB0590301	210 X 297 mm	Black	0,550 kg	390 X 550 X 590 mm



Tab & Inset. Please don't forget to order.
TAB5904003

PHYSICAL DATA

Material
Plastic body, plastic inserts, PET pockets with plastic frame.

Warranty
All products are guaranteed for 3 years by MT Displays with below conditions:
Warranty Conditions

Installation Considerations
Packed unassembled. Sturdy base for a stable and secure unit. Mix colour pockets are included in the pack. Index tab&insets should be ordered seperately.

Storage Conditions
Goods should be stored at 0° to 25°C in a dry place. Store in the original package.

Design Considerations
Holds 10 pockets at a time. Pockets available in Red, Black and Grey. Double sided pockets allows to display 20 different pages.

Cleaning and Disinfecting
Clean your displays, with damp microfiber clothes, rinsed with simply water or warm, soapy or gentle shampooed water. Avoid using vinegar, abrasive, acidic, alcohol-based or heavy cleaners or cleaners containing Ammonia. Only after cleaning the product, if needed, simply apply disinfectant or sanitizer that is in compliance with your local guidelines and regulations.

Poster Material & Thickness
0,2-0,1mm for standard product. Max poster thickness is 1mm. Any non-standard poster thicknesses should be indicated with order.

Hazardous Substances
MT Displays prioritizes compliance with the REACH (Registration, Evaluation, Authorisation and Restriction of Chemicals) and RoHS (Restriction of Hazardous Substances) directives to protect both the environment and human health. We ensure that our products do not contain substances listed under REACH and adhere to strict RoHS limits for hazardous materials. Our manufacturing process ensures that lead, mercury, cadmium, and other restricted substances remain within the permitted thresholds, guaranteeing safe and sustainable products for our customers.

INSTALLATION INSTRUCTIONS

Adjustable Reference Rack System / 1009937H000

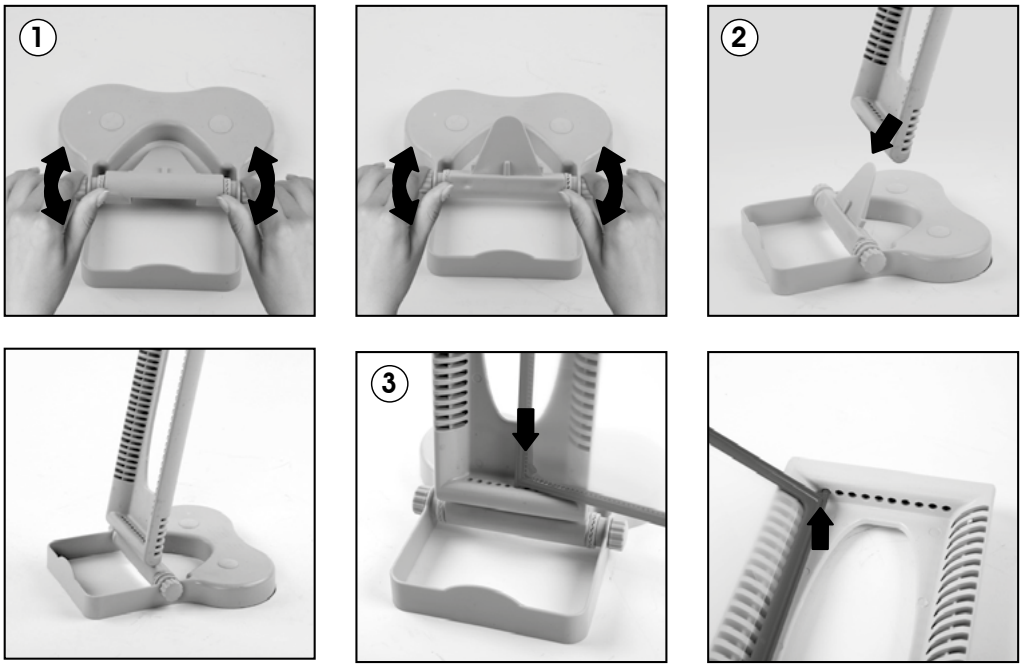

CAUTION : PET Pockets are not included in the pack. Please don't forget to order. Pockets in 3 colours (red, black, gray). Each colour boxed in 10 pcs.



• Please inform the order number on the product or on the carton (e.g. 1/110001394-460) to the place that you have made the purchase if anyproblem with the product occurs.

• All rights reserved. All pictures, figures and writings are secured internationally by copy-right law. Infringements will be sued by civil and legal law.

This technical sheet's contents are all subject to update and modification at MT Displays' exclusive discretion. There is nothing official about this document. For final and legally binding information, please get in touch with the sales staff at MT Displays.

T: +90 850 433 67 85 / info@mtdisplays.com / www.mtdisplays.com

Issue: 01 - 11/2024