WEATHERPROOF A BOARD

DOUBLE SIDED SIDEWALK SIGNS WITH EASY SNAP OPENING WEATHERPROOF DESIGN

35 mm weatherproof. Suitable for use under rainy outdoor conditions. When poster is placed inside the water wick, it is protected, weatherproof. Header board and brochure basket options are present. Easy-to-open snap frame includes the anti-reflex cover in all standard A boards. Frame size alternatives are A2, A1, 500x700 mm, 700x1000 mm, 20"x30", 30"x40" mm

KEY SELECTION ATTRIBUTES

* Patent protected, double-sided Pavement Sign with easy-to-open snap frame design, suitable for weatherproof usage.
* Suitable for use under rainy outdoor conditions with A2 (420x594 mm), A1 (594x841 mm), B2 (500x700 mm), B1 (700x1000 mm), 20"x30" and 30"x40" poster sizes.
* One set includes double sided 35mm aluminium profile snap open frames with sealing and water drainage slots on bottom profiles, UV resistant and anti-reflex PET poster covers, PS backings, mill finish legs, hinges, and scissors for keeping the system stable.
* Weatherproof IP55: When poster is placed inside the water wick, it is protected.
* Optional Wire Header Holder, Header Board and Brochure Baskets are not included, should be ordered separately.
* Please use pull sticker to take off cover.
* Natural silver-anodized, black in standard and various RAL colors available with antimicrobial powder coating.
* Packed in a single box with easy mounting instruction sheet. No tool assembly

T: +90 850 433 67 85 / info@mtdisplays.com / www.mtdisplays.com

COLOURS IN STOCK

Silver Black

COLOUR OPTIONS

- Black Anodised
- Silver Anodised
- White - RAL 9003
- Black - RAL 9005
- Red- RAL 3020
- Blue - RAL 5002
- Green - RAL 6029
- Yellow - RAL 1021

SUITABLE FOR

Weatherproof A Boards can be used for INDOOR and OUTDOOR applications, for signage needs in many locations like shopping centers, markets, groceries, hotels, offices airports, shops and stores, hospitals, schools, apartments and many more.

WATCH VIDEO

Watch video at our website
www.mtdisplays.com

FEATURES

EXPLODED VIEW

TECHNICAL DRAWING

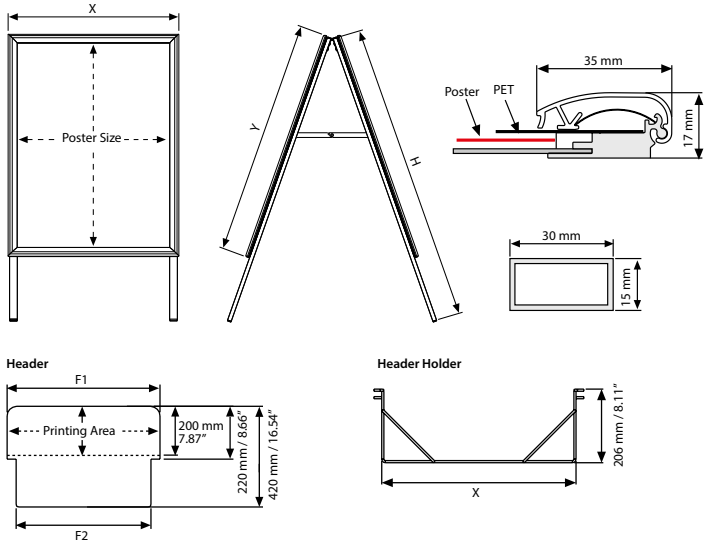

ARTICLES

ARTICLE	POSTER	X	Y	H
UAB3550NA2	420 X 594 mm	482 mm	656 mm	950 mm
UAB3550NA1	594 X 841 mm	656 mm	903 mm	1150 mm
UAB3550NB2	500 X 700 mm	562 mm	762 mm	950 mm
UAB3550NB1	700 X 1000 mm	762 mm	1062 mm	1250 mm
UAB3550N22	22" X 28"	24.49"	28.86"	37.40"

WEIGHT	PACKING SIZE
WITH PACKING	*W X H X D
6,200 kg	510 X 1080 X 85 mm
7,850 kg	720 X 1180 X 85 mm
8,350 kg	630 X 1100 X 85 mm
13,350 kg	800 X 1390 X 85 mm
17.636 lbs	25.39" X 41.34" X 4.33"

HEADER			WEIGHT
ARTICLE	F1	F2	WITH PACKING
UYTT3550A2	482 mm	405 mm	
UYTT3550A1	657 mm	580 mm	
UYTT3550B2	561 mm	486 mm	
UYTT3550B1	761 mm	686 mm	
UYTT355022	620 mm	545 mm	

HEADER HOLDER		WEIGHT
ARTICLE	X	WITH PACKING
UYFT3550A2	425 mm	
UYFT3550A1	600 mm	
UYFT3550B2	506 mm	
UYFT3550B1	706 mm	
UYFT355022	565 mm	

OPTIONAL ACCESSORIES

A Board header
(4 mm PVC Foam).

A board basket A4 size
to hang on scissors.
UYTS3000A4

A Board wire header
holder.

PHYSICAL DATA

Material
32mm aluminium profile click clack snap open frame, UV resistant and anti-reflex PET poster cover, galvanised metal PS backing. PVC Foam optional header.

Poster Material & Thickness
0,10 – 0,20 mm with gasket/water wick for standard product. Max. poster thickness is 2 mm for low density rigid posters such as PVC foam, PP, etc. Any non-standard poster thickness should be indicated with order.

Surface Finish
Natural silver-anodized, or black in standard and various RAL colors available with antimicrobial powder coating. Call for custom color requests.

Recycled Content
Up to 78% recycled content used.

Warranty
All products are guaranteed for 2 years by MT Displays with below conditions:
Warranty Conditions

Installation Considerations
Weatherproof A Boards are packed in a single box with an easy-to-understand instruction sheet. No tool assembly. One set includes double sided 35mm aluminium profile snap open frames with sealing and water drainage slots on bottom profiles, PET anti-reflex poster covers, PS backings, mill finish legs, hinges, and scissors for keeping the system stable. Please use pull sticker to take off cover. Optional Wire Header Holder, Header Board and Brochure Baskets are not included, should be ordered separately.

Storage Conditions
Goods should be stored at 0° to 25°C in a dry place. Store in the original package.

Design Considerations
Patent protected, double-sided Pavement Sign with easy-to-open snap frame design. Suitable for use under rainy outdoor conditions with A2 (420x594 mm), A1 (594x841 mm), B2 (500x700 mm), B1 (700x1000 mm), 20"x30" and 30"x40" poster sizes. Weatherproof IP55: When poster is placed inside the water wick, it is protected. Suitable for silk screen printing, max. letter height is 16mm.

Hazardous Substances
Displays Market prioritizes compliance with the REACH (Registration, Evaluation, Authorisation and Restriction of Chemicals) and RoHS (Restriction of Hazardous Substances) directives to protect both the environment and human health. We ensure that our products do not contain substances listed under REACH and adhere to strict RoHS limits for hazardous materials. Our manufacturing process ensures that lead, mercury, cadmium, and other restricted substances remain within the permitted thresholds, guaranteeing safe and sustainable products for our customers

Cleaning and Disinfecting
Clean your displays, with damp microfiber clothes, rinsed with simply water or warm, soapy or gentle shampooed water. Avoid using vinegar, abrasive, acidic, alcohol-based or heavy cleaners or cleaners containing Ammonia. Only after cleaning the product, if needed, simply apply disinfectant or sanitizer that is in compliance with your local guidelines and regulations.

Patent
PCT/EP2018/060515

PRINT TEMPLATES

Weatherproof A Board - A2
Document Size: 430 x 604 mm (Includes Bleeds)
Finished Size: A2 (420 x 594 mm) **Print**

Weatherproof A Board - A1
Document Size: 604 x 851 mm (Includes Bleeds)
Finished Size: A1 (594 x 841 mm) **Print**

Weatherproof A Board - B2
Document Size: 510 x 710 (Includes Bleeds)
Finished Size: B2 (500 x 700 mm) **Print**

Weatherproof A Board - B1
Document Size: 710 x 1010 (Includes Bleeds)
Finished Size: B1 (700 x 1000 mm) **Print**

Weatherproof A Board - 22" x 28"
Document Size: 22.4" x 28.4" (Includes Bleeds)
Finished Size: 22" x 28" (558.8 x 711.2 mm)

INSTALLATION INSTRUCTIONS

Weatherproof A Board / 1007029

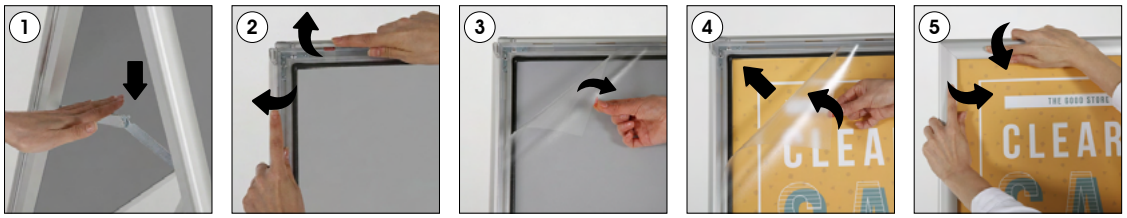

Optional Header & Header Holder

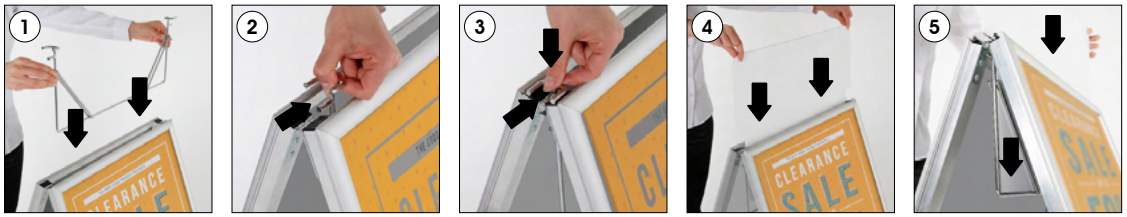

Optional Basket

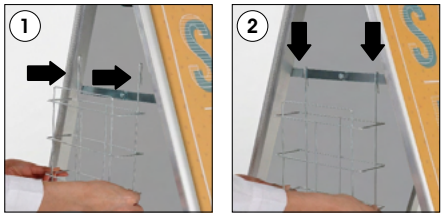

Note: Wire header holder, PVC Foam header and baskets are optional.

- Please inform the order number on the product or on the carton (e.g. 1/110001394-460) to the place that you have made the purchase if anyproblem with the product occurs.
- All rights reserved. All pictures, figures and writings are secured internationally by copy-right law. Infringements will be sued by civil and legal law.

This technical sheet's contents are all subject to update and modification at MT Displays' exclusive discretion. There is nothing official about this document. For final and legally binding information, please get in touch with the sales staff at MT Displays.