WINDPRO SLIM 2 TIER

DOUBLE SIDED PAVEMENT SIGNS WITH TOP OPENING SLIDE-IN DESIGN

WindPro Slim is a double-sided stopper as pavement sign. It is suitable for outdoor use. Frame is made of sturdy aluminium. Poster is secured by standing firm between cover and backing. 2xAnti-reflex poster protection and a separator are included. It is suitable for 22×60 inch poster. It is equipped with water fillable heavy base which is made of HDPE. Water capacity is 24lt. Total weight is 27,5 kg when full with water. It is equipped with wheels for easy carriage. Colour options are silver and black.

KEY SELECTION ATTRIBUTES

* Double-sided, outdoor Pavement Sign with two foldible and top opening slide-in frames, equipped with swinging springs and water base for flexibility and stability.
* Easy to use by sliding posters from top opening profiles in between PET covers and PVC foam backing. The poster is firmly secured in between the backing and cover. Sliding the posters into bottom frame is possible after the top frame is folded.
* Suitable for outdoor use and 4 different advertisement options on one unit with 559x711mm (22"x28") poster size for each advertisement.
* Standard poster thickness is between 0,10 to 0,20 mm. If used without PVC foam backer, maximum poster thickness is 4,00 mm for low density rigid posters.
* One set includes 2 double-sided top opening slide-in aluminium frames with 19 mm depth and folding&locking mechanism for two frames, swinging springs for stabilizing the frame in outdoor conditions, 4 anti-reflex PET poster covers and 2 PVC foam backing, 720x530x152mm water fillable HDPE heavy base with wheels for easy carrying and related fixing accessories like, sheet plates, nuts, spanners, and allen key.
* Water base with 24lt capacity, can be filled with water or sand for providing stability. Weight of water base is 27,5kg, when filled with water.
* Heavy-duty coil springs resist strong winds and return the sign to an upright position.
* Water base is suitable for branding. Printing area: 300x80mm.
* Natural silver-anodized, or black powder coated in standard and various RAL colors available with antimicrobial powder coating. Call for custom color requests.
* It is recommend to carry the product with carry tool when the base is full with water. Carry tool is optional, not included in the package, please order separately.
* Packed with an easy-to-understand instruction sheet. No tool assembly. Assembly in 75 seconds.

Silver, Silver

Black, Black

T: +90 850 433 67 85 / info@mtdisplays.com / www.mtdisplays.com

COLOURS IN STOCK

Silver Black

SUITABLE FOR

Windpro Slim can be used for OUTDOOR applications, for signage needs in many locations like shopping centers, markets, groceries, hotels, offices airports, shops and stores, hospitals, schools, apartments and many more.

WATCH VIDEO

Watch video at our website
www.mtdisplays.com

FEATURES

EXPLODED VIEW

TECHNICAL DRAWING

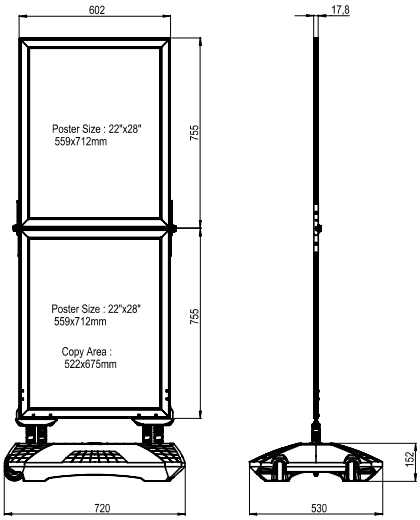

OPTIONAL ACCESSORIES

Optional carry tool.
UYUP480945

ARTICLES

					WEIGHT	PACKING SIZE
BLACK	SILVER	EXTERNAL (x-y)	POSTER	COPY	WITH PACKING	*W X H X D
USWPS1B222	USWPS1N222	602 X 1510 mm	559 X 712 mm	522 X 675 mm	13,000 kg	710 X 1100 X 100 / 570X 770 X 190 mm

PHYSICAL DATA

Material
Slide-in aluminium profile frames with 19mm depth, PET anti-reflex poster cover, PVC foam backing, heavy duty coil springs, HDPE water base.

Poster Material & Thickness
Standard poster thickness is between 0,10 to 0,20 mm. If used without PVC backer, maximum poster thickness is 4,00 mm for low density rigid posters. Any non-standard poster thicknesses should be indicated with order.

Surface Finish
Silver anodized or black colour, antimicrobial powder coating. Custom colors also available, call for custom color requests.

Recycled Content
For frame part up to 78% and for base part up to 40% recycled content used.

Warranty
All products are guaranteed for 3 years by MT Displays with below conditions:
Warranty Condition

Storage Conditions
Goods should be stored at 0° to 25°C in a dry place. Store in the original package.

Installation Considerations
Packed with an easy-to-understand instruction sheet. No tool assembly. Assembly in 75 seconds. One set includes 2 double-sided top opening slide-in aluminium frames with 19 mm depth and folding&locking mechanism for two frames, swinging springs for stabilizing the frame in outdoor conditions, 4 anti-reflex PET poster covers and 2 PVC foam backing, 720x530x152mm water fillable HDPE heavy base with wheels for easy carrying and related fixing accessories like, sheet plates, nuts, spanners, and allen key. Water base with 24lt capacity, can be filled with water or sand for providing stability. Weight of water base is 27,5kg, when filled with water. Heavy-duty coil springs resist strong winds and return the sign to an upright position. It is recommend to carry the product with carry tool when the base is full with water. Carry tool is optional, not included in the package, please order separately.

Design Considerations
Double-sided, outdoor Pavement Sign with two foldible and top opening slide-in frames, equipped with swinging springs and water base for flexibility and stability. Easy to use by sliding posters from top opening profiles in between PET covers and PVC foam backing. The poster is firmly secured in between the backing and cover. Sliding the posters into bottom frame is possible after the top frame is folded. Suitable for outdoor use and 4 different advertisement options on one unit with 559x711mm (22"x28") poster size for each advertisement. Water base is suitable for branding. Printing area: 300x80mm.

Cleaning and Disinfecting
Clean your displays, with damp microfiber clothes, rinsed with simply water or warm, soapy or gentle shampooed water. Avoid using vinegar, abrasive, acidic, alcohol-based or heavy cleaners or cleaners containing Ammonia. Only after cleaning the product, if needed, simply apply disinfectant or sanitizer that is in compliance with your local guidelines and regulations.

PRINT TEMPLATES

Windpro Slim - 559x712 mm
Document Size: 569 x 712 mm (Includes Bleeds)
Finished Size: 559x712 mm **Print**

INSTALLATION INSTRUCTIONS

WindPro Slim / 1012377H000

Each product includes
- 1 x Frame top & lower part
- 1 x Base
- 2 x PVC Foam backing
- 4 x Pet cover
- 1 x 17 Spanner
- 4 x Nut
- 2 x Sheet plate

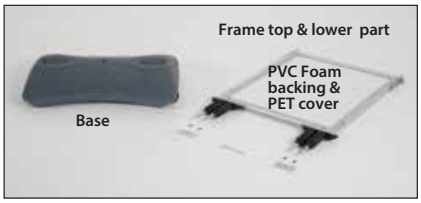

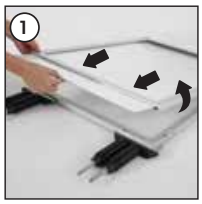

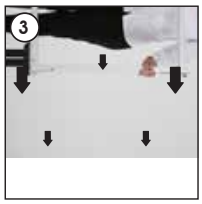

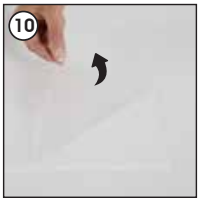

Insert the posters

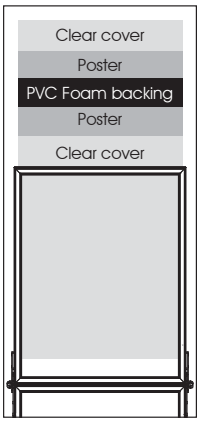

- Please inform the order number on the product or on the carton (e.g. 1/110001394-460) to the place that you have made the purchase if anyproblem with the product occurs.
- All rights reserved. All pictures, figures and writings are secured internationally by copy-right law. Infringements will be sued by civil and legal law.

This technical sheet's contents are all subject to update and modification at MT Displays' exclusive discretion. There is nothing official about this document. For final and legally binding information, please get in touch with the sales staff at MT Displays.

T: +90 850 433 67 85 / info@mtdisplays.com / www.mtdisplays.com

Issue: 01 - 11/2024